FSA size (tool rail)

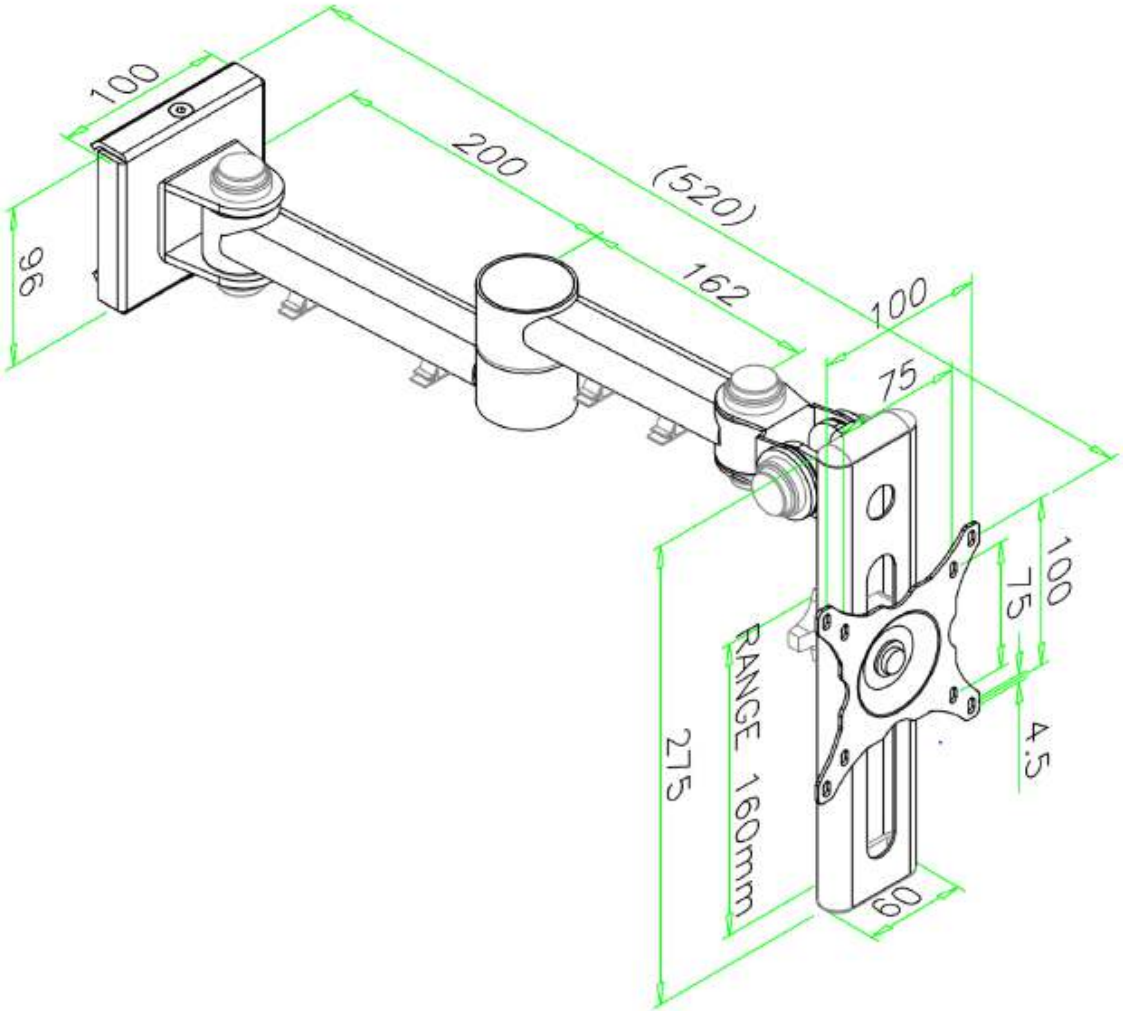

Size sheet

Website: www.abl-uk.com
Tel: 01933 400 080
Email: sales@abl-uk.com